Specification Data

Column & Boom Manipulator
MV Series
Range up to 7.5 metres

TRAVELLING BASE

The **Red Rock** Heavy Duty series of Column & Boom Manipulators are specifically designed and built to withstand the harsh and rugged environments expected in the welding industry. It includes the following features:

- A slewing ring for column mounting, thereby providing a smooth 360-degree lockable rotation.
- All vertical and horizontal rails are precisely machined in single runs giving unsurpassed smooth and steady travel.
- Latest Inverter drives fitted for variable speed of horizontal boom arm travel and rail travel car (optional).
- Worm gearbox for vertical travel via AC motor complete with brake for added safety.
- High tensile roller chain used for vertical travel with the addition of a counter balance system provides smooth effortless vertical travel.
- IP 55 control box and low voltage pendant control station.
- Standard safety feature includes anti-fall device and limit switches for all functions.
- Internally trunked cabling.

Inclusive:

- Power source mounting bracket of your choice

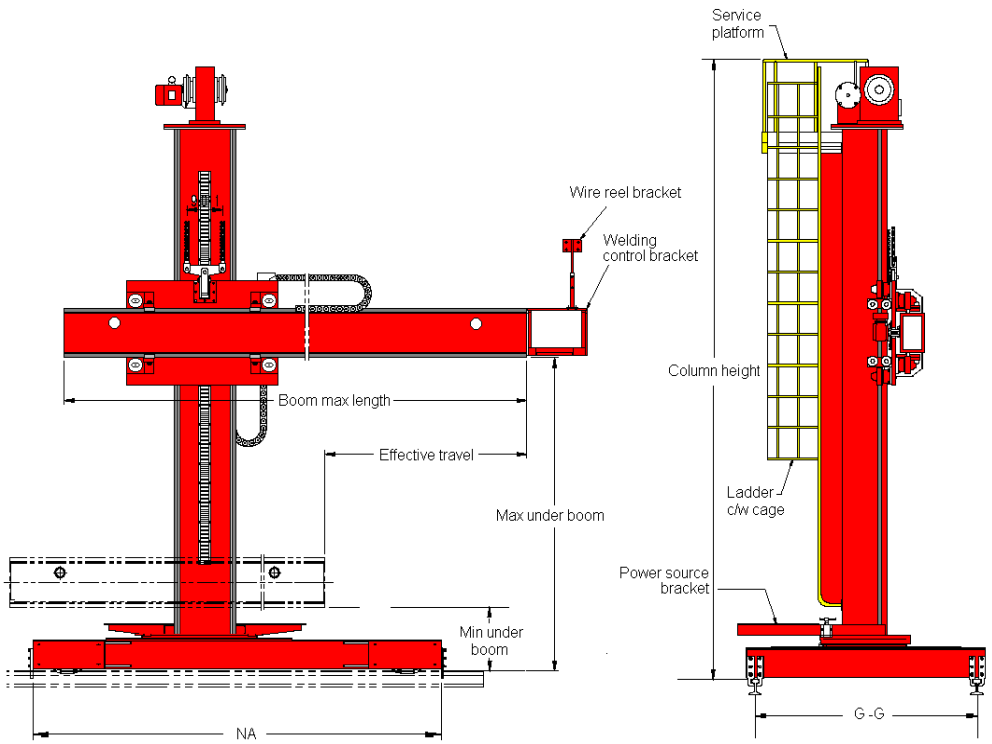

Specification Data

Column & Boom Manipulator
MV Series
Range up to 7.5 metres

Optional features includes

- Travel car, manual or motorized variable speed operated via the same pendant station via selector switch.
- X-Y slide, manual or motorized, operated via the same pendant station.
- Compressed air operated flux recovery unit
- Welding power source & wire feeder controller system

All **Red Rock** Column & Boom Manipulators are grit blasted to SA2.5 and two coats of zinc phosphate paint followed by one coat of polyurethane paintwork will ensure that your investment provides you with many years of uninterrupted service.

MV series with Travelling Base

DIMENSION SPECIFICATIONS

Model with Travelcar	4040-TCM	4545-TCM	5050-TCM	5555-TCM	6060-TCM	6565-TCM
Column height	5684	6184	6684	7184	7684	8184
Boom length	6500	7000	7500	8000	8500	9000
Vertical under boom (max)	4000	4500	5000	5500	6000	6500
Boom effective range	4000	4500	5000	5500	6000	6500

Model with Travelcar	7070-TCM	7575-TCM
Column height	8684	9184
Boom length	9500	10000
Vertical under boom (max)	7000	7500
Boom effective range	7000	7500

Specification Data

Column & Boom Manipulator
MV Series
Range up to 7.5 metres

DATA SPECIFICATIONS

Vertical Speed	1250mm/min
Boom Speed	150~1500mm/min
Travel Speed	200~2500mm/min
Vertical Drive	AC 2.2kw c/w brake
Boom Drive	AC 0.75kw c/w force cooling
Travel car Drive	AC 0.75kw c/w brake
Electrical Panel	IP55 class
Base Type	Motorized travel car
Travel car G-G Rail	Factory advice
Slewing	Manual
Power Supply	3-phase line
Control Voltage	24Vac
Control Means	Push button pendant c/w m cable
Surface Preparation	Gritbast to SA2.5
Painting	2 coats zinc phosphate 1 coat polyurethane
Color	Red

Note: Scope of cutting table, rail base support and civil works (By Others)

OPTIONS

X-Y Slides 200mm slide	■
Slewing Drive	■
Welding Control	■
Welding Power Source	■
Flux Recovery	■
Walk way	■
Cat Ladder	■

▲ Specify requirement ■ Optional ★ Standard ◆ Specify quantity

Specification Data

Column & Boom Manipulator
MV Series
Range up to 7.5 metres

Manipulator Rail Gauge Table

MV series

Boom Height	4	4.5	5	5.5	6	6.5	7	7.5	8
4	GG2000		GG2500			GG3000		GG3000 c/w counterweight	
4.5									
5									
5.5									
6									
6.5									
7									
7.5									
8									

Notes:
V denotes Max.Under Boom Height (Vertical), in hundreds of mm. i.e. 20 = 2000mm
H denotes Effective Boom Travel (Horizontal), in hundreds of mm. i.e. 20 = 2000mm
CW denotes with Counterweight

Specification Data

Column & Boom Manipulator
MV Series
Range up to 7.5 metres

MV Series with Fixed Base

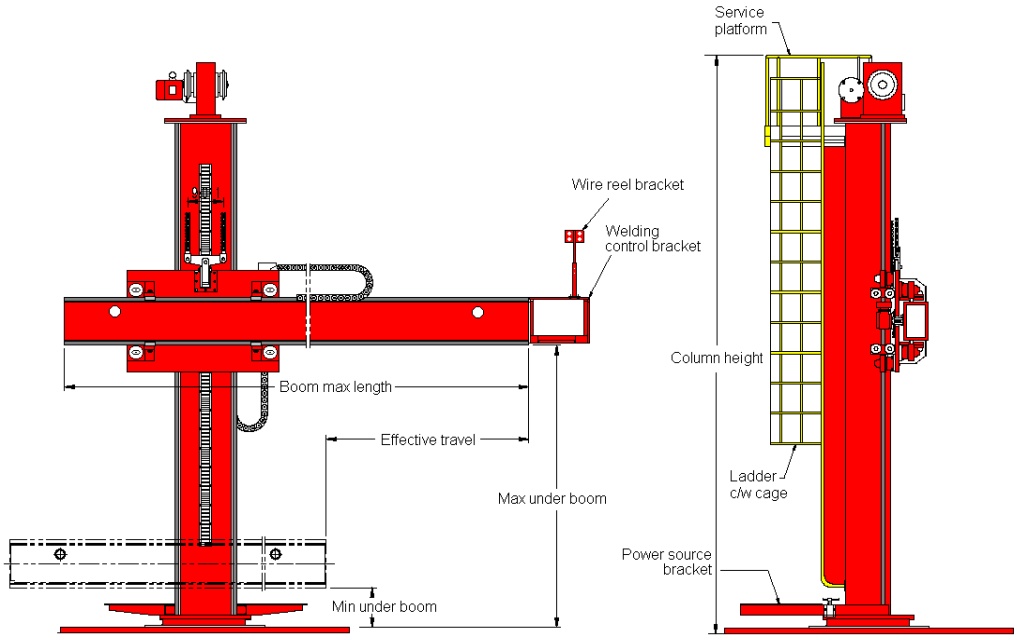

DIMENSION SPECIFICATIONS

Model with fixed base	4040	4545	5050	5555	6060	6565
Column height	5684	6184	6684	7184	7684	8184
Boom length	6500	7000	7500	8000	8500	9000
Vertical under boom (max)	4000	4500	5000	5500	6000	6500
Boom effective range	4000	4500	5000	5500	6000	6500

Model with TCM	7070	7575
Column height	8684	9184
Boom length	9500	10000
Vertical under boom (max)	7000	7500
Boom effective range	7000	7500

Specification Data

Column & Boom Manipulator
MV Series
Range up to 7.5 metres

DATA SPECIFICATIONS

Vertical Speed	1250mm/min
Boom Speed	150~1500mm/min
Travel Speed	200~2500mm/min
Vertical Drive	AC 2.2kw c/w brake
Boom Drive	AC 0.75kw c/w force cooling
Electrical Panel	IP55 class
Base Type	Motorized travel car
Slewing	Manual
Power Supply	3-phase line
Control Voltage	24Vac
Control Means	Push button pendant c/w m cable
Surface Preparation	Gritbast to SA2.5
Painting	2 coats zinc phosphate 1 coat polyurethane
Color	RAL5015 blue

Note: Scope of cutting table, rail base support and civil works (By Others)

OPTIONS

X-Y Slides 200mm slide	■
Slewing Drive	■
Welding Control	■
Welding Power Source	■
Flux Recovery	■
Walk way	■
Cat Ladder	■

▲ Specify requirement ■ Optional ★ Standard ◆ Specify quantity

Specifications for Manipulator		
1	Model	MV7575-FM-WE-DC
2	Max. Under Boom Height	7500mm
3	Effective Boom Travel	7500mm
4	Vertical Speed	1250mm/min running at 50Hz
5	Boom Speed	165~1650mm/min running at 5~50Hz
6	Travel Speed	N.A.
7	Vertical Drive	3.0KW AC Motor c/w Brake
8	Boom Drive	0.55KW AC Motor c/w Force Cooling
9	Travel Car Drive	N.A.
10	Drive Control	N.A.
11	Welding Controller/Feeder	N.A. (by Others)
12	Welding Controller Bracket	N.A.
13	Welding Power Source/Brand	T.B.A. (by Others)
14	Welding Power Source Skid	Yes
15	Electrical Panel	Yes
16	Base Type	Floor Mount Fixed Base
17	Travel Car Rail G-G	N.A.
18	Slewing Feature	Manual, ±180°
19	Slewing Drive	N.A.
20	Dragchain	Yes, column and boom only
21	X-Y Slides	No
22	Operator Chair	No
23	Flux Recovery	No
24	Incoming Supply	380/400/415V-3P-50Hz or 440/460/480V-3P-60Hz
25	Control Voltage	24Vac
26	Control Means	Via Push Button Pendant c/w 18m Cable
27	Payload	250kg
28	Surface Preparation	Gritblast to SA2.5
29	Painting	Lead free, 2 Coats Zinc Phosphate, 1 Coat Polyurethane
30	Colour	RAL3003 Red & RAL9005 Black for fixed base only
31	Qty	1 Unit
32	Weight	~9050kg

Note:

1. This drawing is accurate at the time of preparation and maybe subject to final design change.

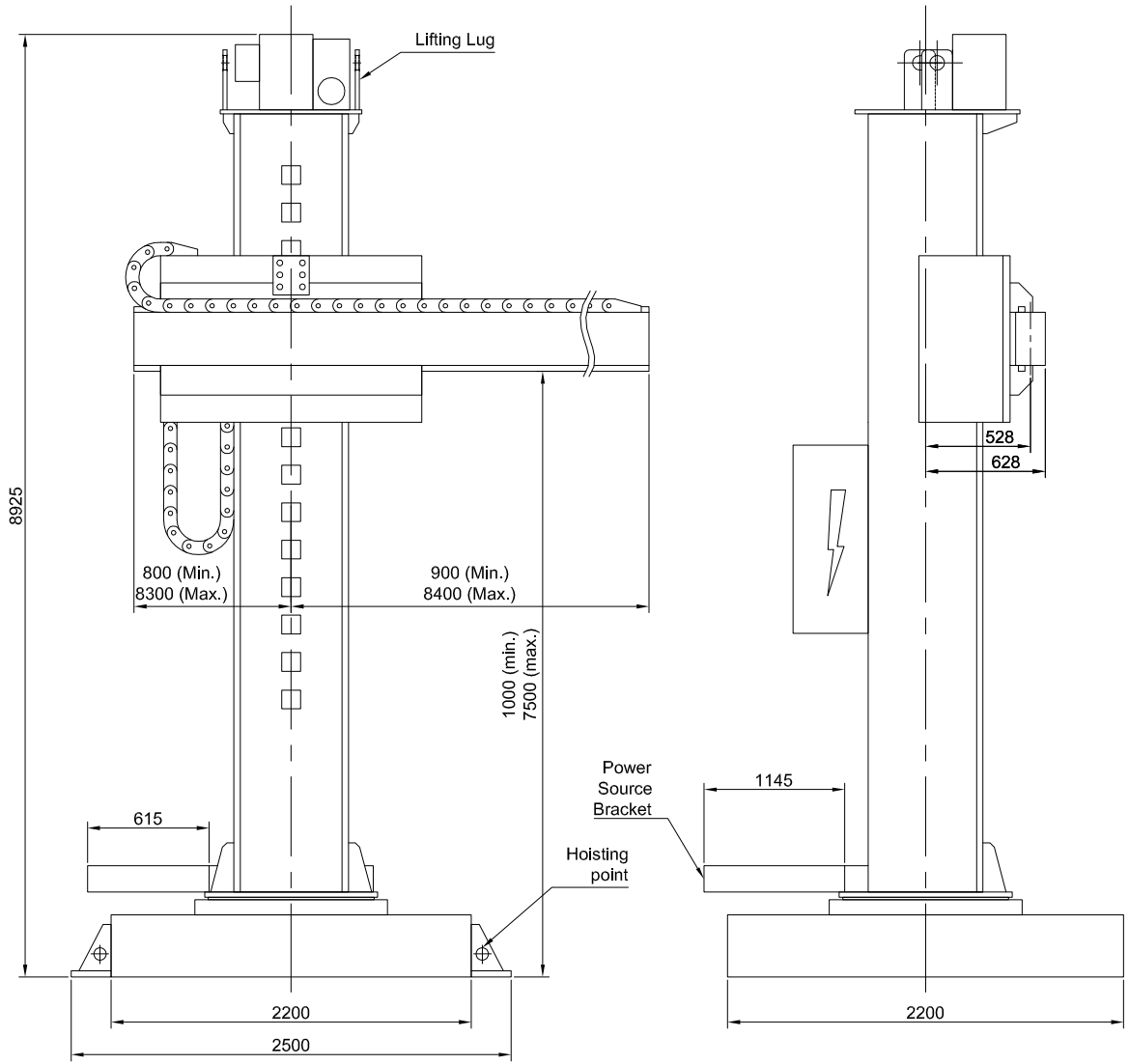

All dimensions in mm unless otherwise specified.

REV	DATE	DESCRIPTION	EDIT BY	REMARKS

REDROCK

CUSTOMER APPROVAL

CHECKED BY:

DRAWN BY: IC

30-05-2011

CUSTOMER:

DRAWING NAME: Very Heavy Duty Manipulator

DRAWING NO.: MV7575-FM-WE-DC

THE ORIGINAL AND ALL COPIES OF THIS DRAWING TOGETHER WITH THE COPYRIGHT THEREOF ARE THE SOLE PROPERTY OF RED ROCK. DESIGN AND SPECIFICATIONS ARE SUBJECT TO CHANGE WITHOUT PRIOR NOTICE.

SCALE: N.T.S.

REVISION: 0

SHEET: 1 OF 1

Specifications for Manipulator		
1	Model	MV7575-PT3000-WE-DC
2	Max. Under Boom Height	7500mm
3	Effective Boom Travel	7500mm
4	Vertical Speed	1250mm/min running at 50Hz
5	Boom Speed	165~1650mm/min running at 5~50Hz
6	Travel Speed	333~3335mm/min running at 5~50Hz
7	Vertical Drive	3.0KW AC Motor c/w Brake
8	Boom Drive	0.55KW AC Motor c/w Force Cooling
9	Travel Car Drive	0.75KW AC Motor c/w Brake
10	Drive Control	N.A.
11	Welding Controller/Feeder	N.A. (by Others)
12	Welding Controller Bracket	N.A.
13	Welding Power Source/Brand	N.A. (by Others)
14	Welding Power Source Skid	Yes
15	Electrical Panel	Yes
16	Base Type	Travel Car Motorized
17	Travel Car Rail G-G	3000mm
18	Slewing Feature	Manual, ±180°
19	Slewing Drive	N.A.
20	Dragchain	Yes, column and boom only
21	X-Y Slides	No
22	Operator Chair	No
23	Flux Recovery	No
24	Incoming Supply	380/400/415V-3P-50Hz or 440/460/480V-3P-60Hz [1]
25	Control Voltage	N.A.
26	Control Means	N.A.
27	Payload	250kg
28	Surface Preparation	Gritblast to SA2.5
29	Painting	Lead free, 2 Coats Zinc Phosphate, 1 Coat Polyurethane
30	Colour	RAL3003 Red & RAL9005 Black for travelcar only
31	Qty	1 Unit
32	Weight	~9500kg

Note:

1. This drawing is accurate at the time of preparation and maybe subject to final design change.

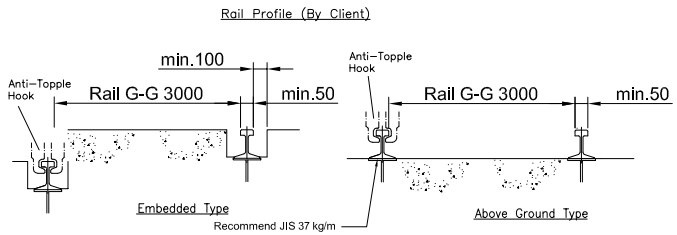

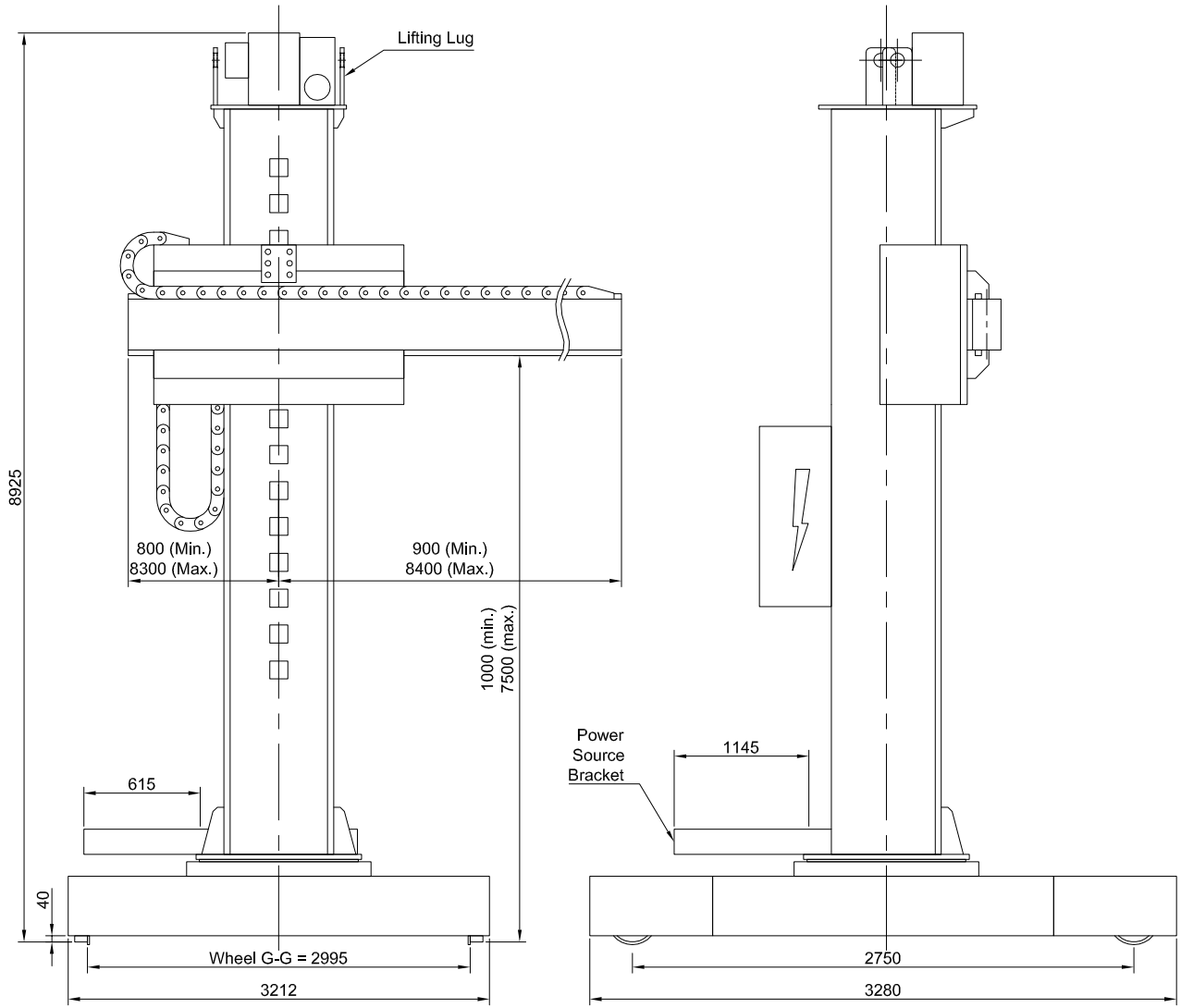

All dimensions in mm unless otherwise specified.

REV	DATE	DESCRIPTION	EDIT BY	REMARKS

REDROCK

CUSTOMER APPROVAL

CHECKED BY:

DRAWN BY: IC

30-05-2011

CUSTOMER:

DRAWING NAME: Very Heavy Duty Manipulator

DRAWING NO.: MV7575-PT3000-WE-DC

THE ORIGINAL AND ALL COPIES OF THIS DRAWING TOGETHER WITH THE COPYRIGHT THEREOF ARE THE SOLE PROPERTY OF RED ROCK. DESIGN AND SPECIFICATIONS ARE SUBJECT TO CHANGE WITHOUT PRIOR NOTICE.

SCALE: N.T.S.

REVISION: 0

SHEET: 1 OF 1